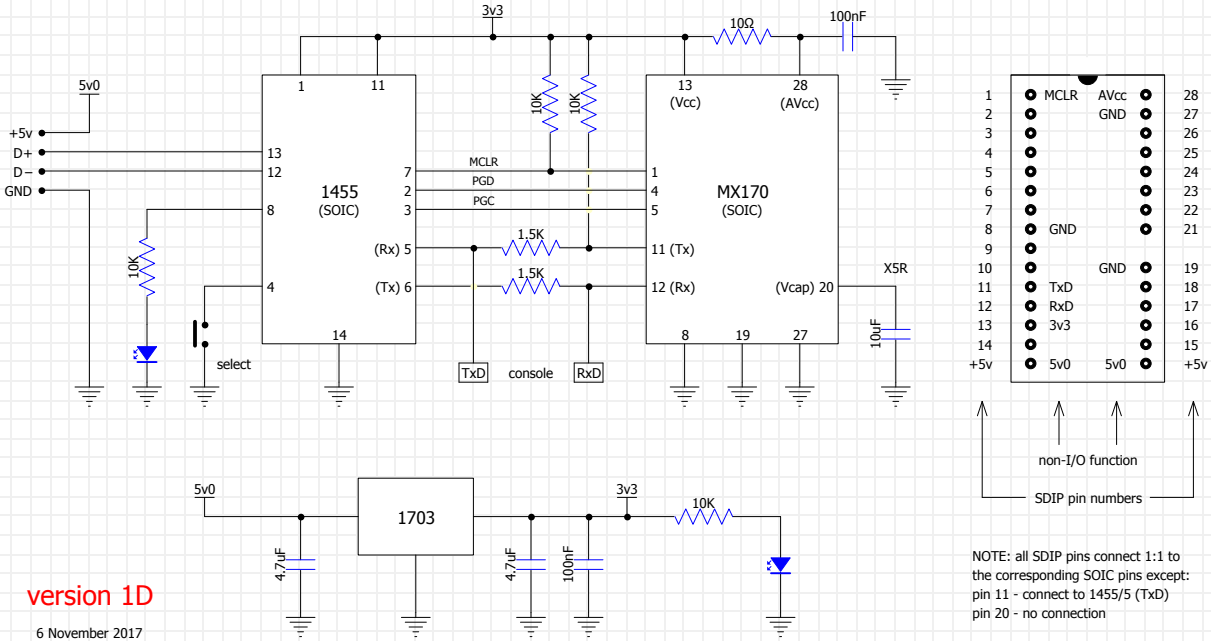
3v3
10Ω
100nF
5v0
+5v
D+
D−
GND
1
11
13
12
8
4
1455
(SOIC)
7
2
3
(Rx) 5
(Tx) 6
14
10K
10K
MCLR
PGD
PGC
1.5K
1.5K
13
(Vcc)
28
(AVcc)
1
4
5
MX170
(SOIC)
11 (Tx)
12 (Rx)
(Vcap) 20
8
19
27
X5R
10uF
10K
select
TxD
console
RxD
5v0
1703
4.7uF
4.7uF
100nF
3v3
10K
1 MCLR AVcc 28
2 GND 27
3 26
4 25
5 24
6 23
7 22
8 GND 21
9
10 GND 19
11 TxD 18
12 RxD 17
13 3v3 16
14 15
+5v 5v0 5v0 +5v
non-I/O function
SDIP pin numbers
NOTE: all SDIP pins connect 1:1 to
the corresponding SOIC pins except:
pin 11 - connect to 1455/5 (TxD)
pin 20 - no connection
version 1D
6 November 2017